PAFF I C102A

Designed by Michele Mantovani

2026-9-17

1D

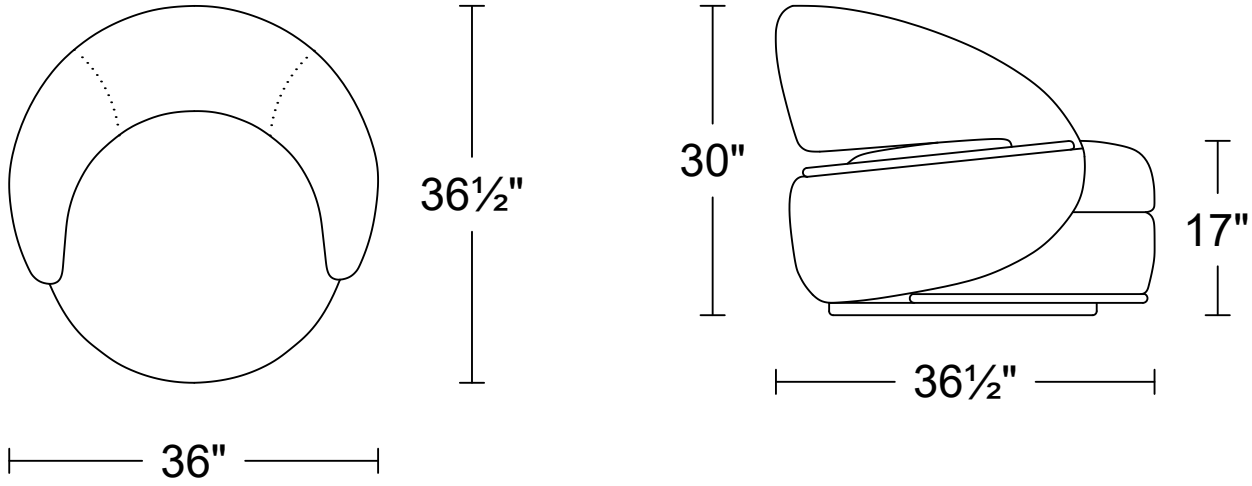

C102A-Full leather version

C102AO-Full fabric version